SEALEY
THE TOOL COMPANY

Trolley Jack 2 Tonne Short Chassis

Model No. 1050CX.V5

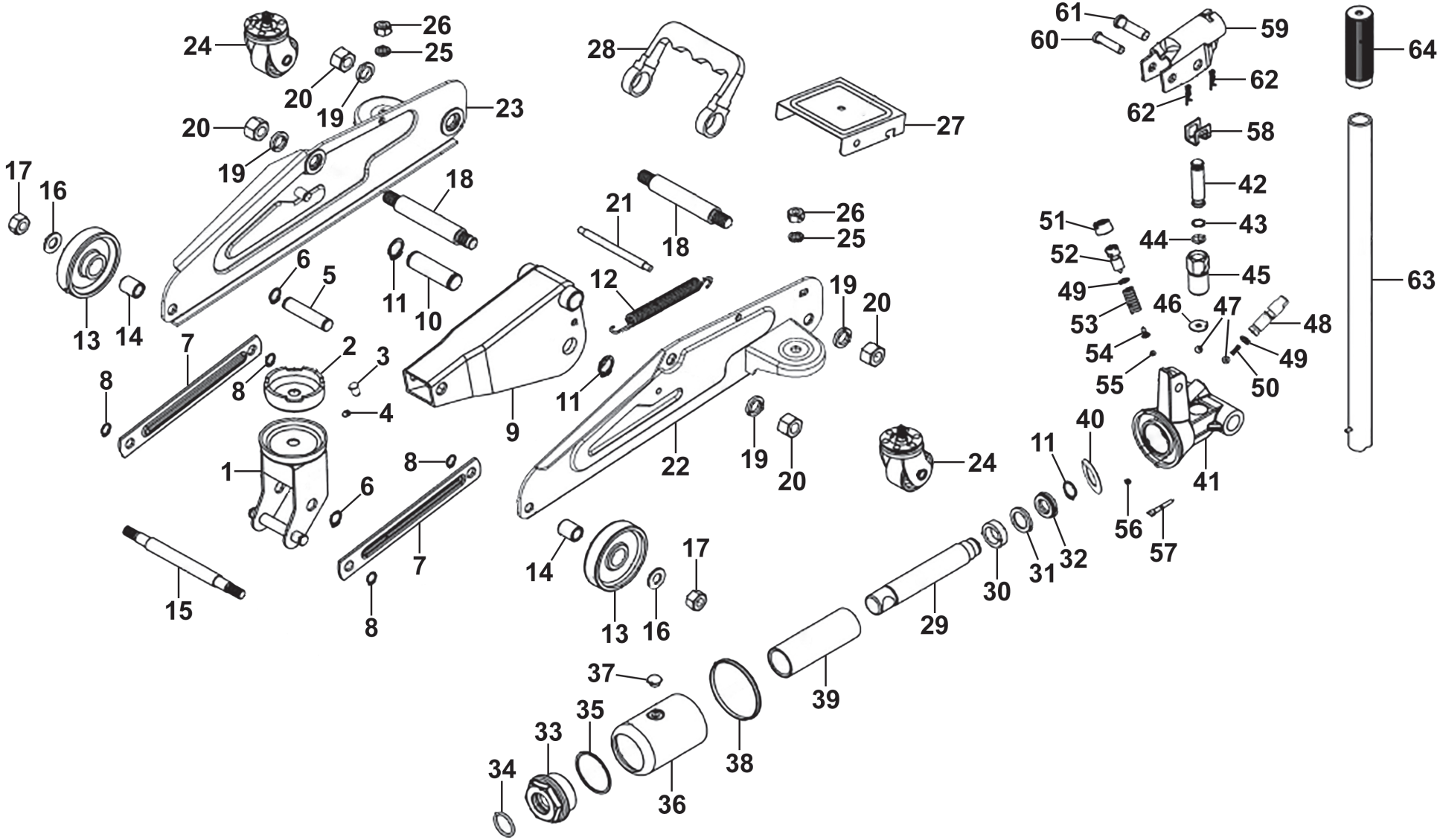

© Jack Sealey Limited

SEALEY

THE TOOL COMPANY

Trolley Jack 2 Tonne Short Chassis

Model No. 1050CX.V5

Item	Part No.	Description	Qty
1	1050CX.V5-01	Saddle Base	1
2	1050CX.V5-02	Saddle, White Serrated Cup (F) Ø 50mm	1
3	1050CX.V5-03	Saddle Pin	1
4	1020LE.V3-08	External Circlip 11.8mm ID.	1
5	1050CX.V5-05	Axle	1
6	1020LE.V3-09	External Circlip 12.0mm ID.	2
7	1050CX.V5-07	Radius Link	2
8	1050CX.V5-08	External Circlip	4
9	1050CX.V5-09	Lifting Arm Assembly	1
10	1050CX.V5-10	Ram Plunger Axle	1
11	1050CX.V5-11	External Circlip	3
12	1050CX.V5-12	Return Spring	1
13	1050CX.V5-13	Wheel, Front Fixed, (D: 66 W:22 B: 17)	2
14	1050CX.V5-14	Wheel Bush	2
15	1050CX.V5-15	Front Axle	1
16	FWM10.S	Flat Washer M10 Zinc	2
17	SN10.S	Steel Nut M10 Zinc	2
18	1050CX.V5-18	Frame Pin	2
19	SWM12.S	Spring Washer M12 Zinc	4
20	SN12.S	Steel Nut M12 Zinc	4
21	1050CX.V5-21	Frame Tie Rod	1
22	1050CX.V5-22	Side Frame, Left	1
23	1050CX.V5-23	Side Frame, Right	1
24	1050CX.V5-24	Wheel, Rear Swivel Castor, Single Bolt (D: 38 W: 18 B: 6 H: 67)	2
25	SWM8.S	Spring Washer M8 Zinc	2
26	NLN8.S	Nyloc Nut M8 Zinc	2
27	1050CX.V5-27	Cover Plate	1

Item	Part No.	Description	Qty
28	1050CX.V5-28	Carry Handle	1
29	1050CX.V5-29	Ram Piston	1
30	1020LE.V3-39	Bushing Cover	1
31	1020LE.V3-40	Back-up Washer	1
32	1020LE.V3-41	U-Cup Seal	1
33	1050CX.V5-33	Top Nut	1
34	1020LE.V3-31	O-Ring (Ø25 × Ø3.55)	1
35	1020LE.V3-32	Seal Ring	1
36	1050CX.V5-36	Reservior	1
37	1020LE.V3-34	Oil Seal	1
38	1020LE.V3-35	Wedge Ring	1
39	1050CX.V5-39	Cylinder	1
40	1020LE.V3-37	Flat Washer (Ø34 x Ø23 x 0.8)	1
41	1050CX.V5-41	Base	1
42	1050CX.V5-42	Pump Piston	1
43	1020LE.V3-58	Back-up Washer	1
44	GSA08.09-4	O-Ring, (Ex: 11.21 In: 7.65 Cs: 1.78)	1
45	1050CX.V5-45	Pump	1
46	1020LE.V3-55	Flat Washer (Ø16 x 4 × 4 x 1)	1
47	SB-6.1	Steel Ball 6.1mm	2
48	1050CX.V5-48	Release Valve	1
49	1020LE.V3-51	O-Ring (Ø6 × Ø3)	2
50	1050CX.V5-50	Release Valve Spring	1
51	1050CX.V5-51	Protection Cap	1
52	1050CX.V5-52	Safety Valve Screw	1
53	1050CX.V5-53	Safety Valve Spring	1
54	1050CX.V5-54	Safety Valve Base	1

Note: It is our policy to continually improve products and as such we reserve the right to alter data, specifications and component parts without prior notice. See www.sealey.co.uk for the latest information.
Important: No liability is accepted for incorrect use of product. Spare parts must be fitted by a competent person.

Jack Sealey (EU) Ltd t/a Sealey Group Farney Street, Carrickmacross, Co. Monaghan, A81 PK68 Ireland
Jack Sealey Ltd t/a Sealey Group Kempson Way, Suffolk Business Park, Bury St Edmunds, Suffolk, IP32 7AR UK
Tel: 01284 757500 ▪ **Email:** sales@sealey.co.uk ▪ **Web:** www.sealey.co.uk

© Jack Sealey Limited

Trolley Jack 2 Tonne Short Chassis

THE TOOL COMPANY

Model No. 1050CX.V5

Item	Part No.	Description	Qty
55	SB-4.0	Steel Ball 4.0mm	1
56	SB-5.0	Steel Ball 5.0mm	1
57	1020LE.V3-43	Filter	1
58	1050CX.V5-58	Connection Sleeve	1
59	1050CX.V5-59	Handle Socket	1
60	1050CX.V5-60	Handle Socket Pin (A)	1
61	1050CX.V5-61	Handle Socket Pin (B)	1
62	1050CX.V5-62	Handle Socket Retaining Pin	2

Item	Part No.	Description	Qty
63	1050CX.V5-63	Jack Handle, White (c/w Grip) Ø21 x 400mm (Pinched Oval 16mm	1
64	1050CX.V5-64	Handle Grip for Jack Handle	1
--	1050CX.V5-HU	Hydraulic Unit Complete (Not Shown)	1
--	1050CX.V5-RK	Repair Kit (Not Shown)	1

Note: It is our policy to continually improve products and as such we reserve the right to alter data, specifications and component parts without prior notice. See www.sealey.co.uk for the latest information.
Important: No liability is accepted for incorrect use of product. Spare parts must be fitted by a competent person.

Jack Sealey (EU) Ltd t/a Sealey Group Farney Street, Carrickmacross, Co. Monaghan, A81 PK68 Ireland
Jack Sealey Ltd t/a Sealey Group Kempson Way, Suffolk Business Park, Bury St Edmunds, Suffolk, IP32 7AR UK
Tel: 01284 757500 ▪ **Email:** sales@sealey.co.uk ▪ **Web:** www.sealey.co.uk

© Jack Sealey Limited